NEED	◯	.	PURCHASING SPECIFICATION	.	REQUEST FOR APPROVAL	.	DELIVERY DRAWING	.	INSPECTING STANDARD	.	QC-PROCESS

FILE NAME:B2-20672-012X.DRW

3RD ANGLE PROJECTION

C A R E E R

(YDSLH-24007)
REV.1(2025.4.18)CHANGE NAME FROM SD15 TO SD150.
(YDSLH-25007)(SHIGA)

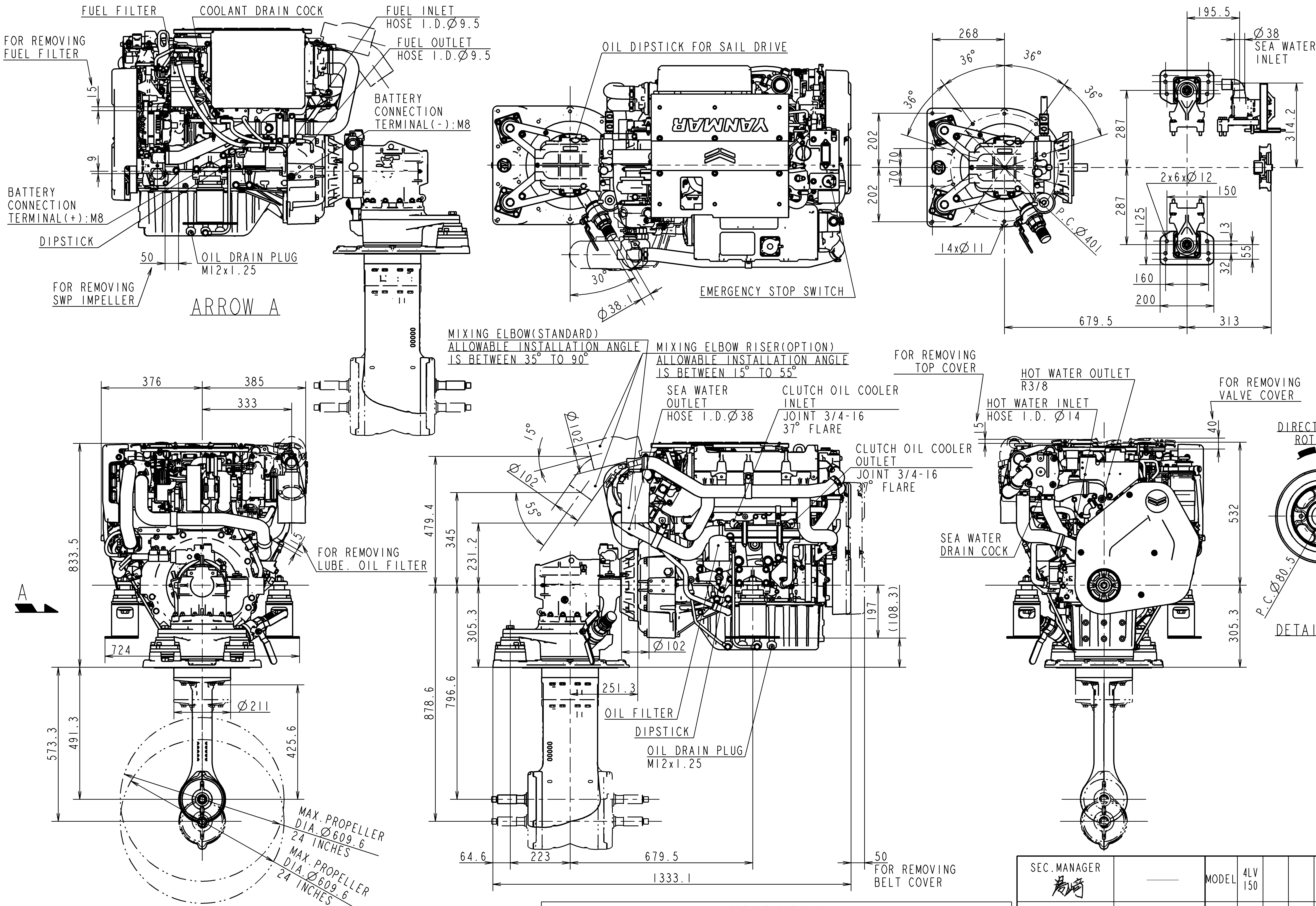

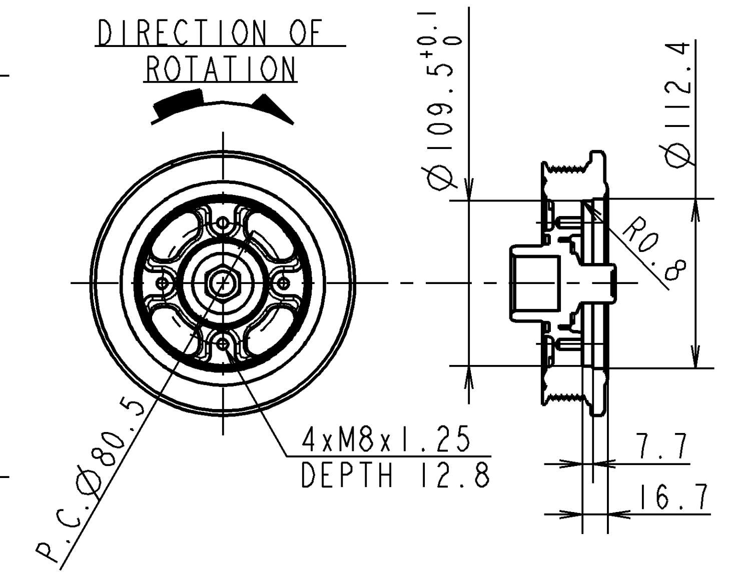

DETAIL OF FRONT COUPLING
(SCALE 1:5)

SPECIFICATIONS		
Model		4LV150
Continuous Power(ISO 8665) kW/min⁻¹		100/3392
Fuel Stop Power	Propeller shaft(ISO 8665) kW/min⁻¹	---
	Crankshaft(ISO 8665) kW/min⁻¹	110/3500
Reduction ratio		2.51
Dry mass kg		Approx.342
Direction of rotation at Propeller (Forward)		BOTH

3D-CAD	
NOTICE	
GEOMETRICAL TOLERANCE	
KIND OF TOLERANCE	SYMBOL
FORM: STRAIGHTNESS TOLERANCE	—
CIRCULARITY TOLERANCE	○
PROFILE OF LINE TOLERANCE	⌒
FLATNESS TOLERANCE	▱
CYLINDRICITY TOLERANCE	⌭
PROFILE TOLERANCE OF SURFACE	⌓
ORIENTATION: PARALLELISM TOLERANCE	//
PERPENDICULARITY TOLERANCE	⊥
ANGULARITY TOLERANCE	∠
LOCATION: POSITIONAL TOLERANCE	⊕
COAXIALITY OR CONCENTRICITY TOLERANCE	◎
SYMMETRY TOLERANCE	⌯
RUN-OUT: CIRCULAR RUN-OUT TOLERANCE	↗
TOTAL RUN-OUT TOLERANCE	⌰

MANAGER
宮崎

SEC.MANAGER		MODEL	4LV 150	SCALE	1:10
寺崎	——	QTY	1	MATERIAL ⚠ ~~SD15~~	
CHECKED 安井	SPECIALIST 北本	NAME	カイケ゛イス゛(4LVxSD150		
DESIGNED Y.Yasui	DRAWN A.Hori	DATE:Y.M.D 2024.3.21	⚠ ~~SD15~~ OUTLINE, 4LVXSD150		

YANMAR
YANMAR MARINE INTERNATIONAL ASIA CO.,LTD.

CODE REV.1 B2-20672-0120 DRAW SIZE A2

UNCONTROLLED 2025/04/22 11:44:24